LHP MOTORS DRIVES
Driven by Commitment

M Series

Gear Brake Motors

- Robust and reliable
- Energy-efficient
- Designed for intermittent, outdoor duty

Gear Brake Motors Designed for Automated Car Parking Systems

LHP introduces M Series Gear Brake Motors (GBM) most suitable for all type of car parking system and goods lift.

Automated, multi-tier car parking systems are ideal solutions in congested cities. They run efficiently with our GBM which is most efficient, reliable and durable solution being designed for outdoor operations.

Features of LHP Gear Brake Motor for Automated Car Parking Systems

- High efficiency, high torque density, robust and sturdy.
- Smoothly work at rated load.
- Electromagnetic DC brakes provide fast engagement and dis-engagement for reliable operation during car parking.
- Brake selected for the operation has higher factor of safety (equal or more than 2 as needed in operation) to work against gravitational force.
- Extremely low noise operation as a result of in-house gear manufacturing and heat treatment under strictly controlled parameters.
- Designed for frequent start-stop operations prevalent in busy car parking.
- Most cost-effective for the applications at rated load.

Range

- Power: 0.2 kW to 37 kW
- Speed: 10 to 100 RPM
- Torque: 60,000 Nm Max.

Motor Specification

- Voltage: 415 V ± 10%, 3Ø
- Frequency: 50 Hz ± 5%
- Protection class: IP55
- Ambient temp.: 50°C
- Efficiency Class: IE2
- Class of Insulation: F

Mounting Options

- Foot mounting (B3)
- Flange Mounting(B5)
- Shaft (Hollow) Mounting

*For other mounting arrangement, please consult with our marketing team.

Gears

Case-hardened steel and teeth are ground finish for noiseless operation.

Brake

- Electromagnetic DC brake with rectifier having DC side- switching for fast engagement
- Brake Coil Voltage: 190 V DC

Lubrication

These are grease lubricated for life. Oil lubrication can be given.

Paint

Provided with paint shade BLUE RAL 5010 for good aesthetic.

Starting Method

Suitable for DOL/ Star-Delta/ VFD.

*For GBM with speed variation, please consult our sales office.

Application

M series GBMs are designed for use in automatic car parking system such as,

- Tower Parking Systems
- Puzzle Parking Systems
- Stack Parking Systems
- Rotary Parking Systems
- Car Parking Elevators

M Series Gear Brake Motors

Selection Table for M Series Gear Brake Motor

Power (kW)	Output Speed (RPM)	Output Torque (Nm)	Service Factor	Model
0.12	16	67	1.5	MFO088-63P4
0.12	18	60	1.7	MFO088-63P4
0.12	20	54	1.9	MFO088-63P4
0.12	23	47	2.1	MFO088-63P4
0.12	25	43	2.3	MFO088-63P4
0.12	30	36	2.8	MFO088-63P4
0.12	35	31	3.2	MFO088-63P4
0.12	40	27	3.7	MFO088-63P4
0.12	50	22	4.6	MFO088-63P4
0.18	16	101	1	MFO088-63P4
0.18	18	90	1.1	MFO088-63P4
0.18	20	81	1.2	MFO088-63P4
0.18	23	70	1.4	MFO088-63P4
0.18	25	65	1.5	MFO088-63P4
0.18	30	54	1.9	MFO088-63P4
0.18	35	46	2.2	MFO088-63P4
0.18	40	40	2.5	MFO088-63P4
0.18	50	32	3.1	MFO088-63P4
0.25	16	140	1.4	MFO105-71P4
0.25	18	125	1.6	MFO105-71P4
0.25	20	112	0.9	MFO088-71P4
0.25	23	98	1	MFO088-71P4
0.25	25	90	1.1	MFO088-71P4
0.25	30	75	1.3	MFO088-71P4
0.25	35	64	1.6	MFO088-71P4
0.25	40	56	1.8	MFO088-71P4
0.25	50	45	2.2	MFO088-71P4
0.37	16	208	1	MFO105-71P4
0.37	18	185	1.1	MFO105-71P4
0.37	20	166	1.2	MFO105-71P4
0.37	23	144	1.4	MFO105-71P4
0.37	25	133	1.5	MFO105-71P4
0.37	30	111	1.8	MFO105-71P4
0.37	35	95	1.1	MFO088-71P4
0.37	40	83	1.2	MFO088-71P4
0.37	50	66	1.5	MFO088-71P4

Power (kW)	Output Speed (RPM)	Output Torque (Nm)	Service Factor	Model
1.1	16	632	1.2	MFO153-80P4
1.1	18	561	1.3	MFO153-80P4
1.1	20	505	1.5	MFO153-80P4
1.1	23	439	1.7	MFO153-80P4
1.1	25	404	1.9	MFO153-80P4
1.1	30	337	2.2	MFO153-80P4
1.1	35	289	2.6	MFO153-80P4
1.1	40	253	3	MFO088-71P4
1.1	50	202	3.7	MFO088-71P4
1.5	16	842	0.9	MFO153-90P4
1.5	18	748	1	MFO153-90P4
1.5	20	674	1.1	MFO153-90P4
1.5	23	586	1.3	MFO153-90P4
1.5	25	539	1.4	MFO153-90P4
1.5	30	449	1.7	MFO153-90P4
1.5	35	385	1.9	MFO153-90P4
1.5	40	337	2.2	MFO153-90P4
1.5	50	269	2.8	MFO153-90P4
2.2	16	1235	1	MFO172-90P4
2.2	18	1098	1.1	MFO172-90P4
2.2	20	988	1.3	MFO172-90P4
2.2	23	859	1.5	MFO172-90P4
2.2	25	790	1.6	MFO172-90P4
2.2	30	659	1.9	MFO153-90P4
2.2	35	565	2.2	MFO153-90P4
2.2	40	494	2.5	MFO153-90P4
2.2	50	395	3.2	MFO153-90P4
3	20	1347	0.9	MFO172-90P4
3	23	1172	1.1	MFO172-90P4
3	25	1078	1.2	MFO172-90P4
3	30	898	1.4	MFO172-90P4
3	35	770	1.6	MFO153-90P4
3	40	674	1.9	MFO153-90P4
3	50	539	2.3	MFO153-90P4
3.7	30	1108	1.1	MFO172-90P4
3.7	35	949	1.3	MFO172-90P4

* For requirements other than above ratings, please contact LHP sales office.

Dimensions of Gear Brake Motor

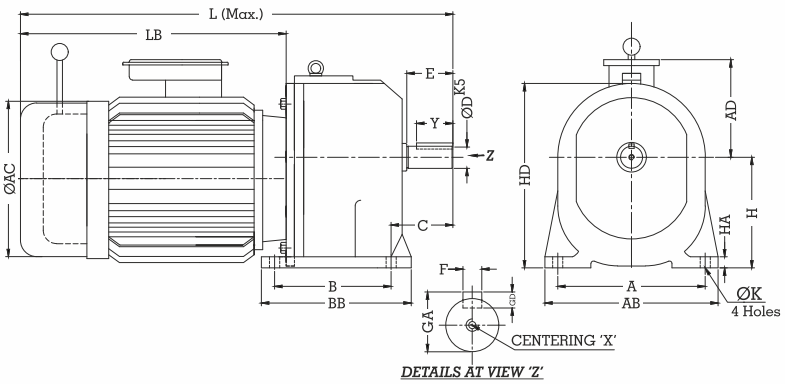

Model	A	B	AB	BB	C	D	E	F	H	GA	GD	HA	HD	K	Y	X	AD	ØAC	LB	L(max)
MFO088-63	130	78	152	100	45	20	40	6	088	22.5	6	12	135	11	30	M6X20	120	116	270	400
MFO088-71																	130	140	295	430
MFO105-63	135	90	175	120	60	28	40	8	105	45	7	14	165	11	28	M8X20	120	116	270	430
MFO105-71																	130	140	295	455
MFO105-80																	155	158	335	495
MFO153-80	215	150	250	195	80	40	60	12	153	43.5	8	25	247	18	55	M16X35	155	158	335	540
MFO153-90																	160	178	405	610
MFO153-100																	165	195	430	635
MFO153-112																	189	224	460	665
MFO172-90	232	172	280	212	105	50	80	14	172	53.5	9	23	275	18	75	M16X35	160	178	405	675
MFO172-100																	165	195	430	700
MFO172-112																	189	224	460	730
MFO172-132																	202	260	545	815

Corporate office & manufacturing plant

Laxmi Hydraulics Pvt. Ltd.
B-11 & B-16, MIDC, Chincholi, Solapur 413 255 Maharashtra, INDIA
Tel.: +91 217 2357001/2/3/4/5 | Fax: +91 217 2357006
E-mail: lhpindia@lhpmotor.com
www.lhpmotor.com

MOTORS DRIVES
Driven by Commitment

LHP / GBM Parking Leaflet / V1 / 0323 / KaleidoscopeB2B.com